Diesel Generator Set

mtu 12V4000 DS1650

380V – 11 kV/50 Hz/standby power/fuel consumption optimized 12V4000G74F/water charge air cooling

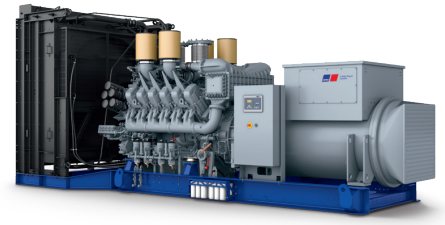

VDE-AR-N 4110 CERTIFIED GERMAN GRID CODE

Optional equipment and finishing shown. Standard may vary.

Product highlights

Benefits
- Approved for renewable fuels (e.g. HVO)
- Low fuel consumption
- Optimized system integration ability
- High reliability
- High availability of power
- Long maintenance intervals

Support
- Global product support offered

Standards
- Engine-generator set is designed and manufactured in facilities certified to standards ISO 2008:9001 and ISO 2004:14001
- Generator set complies to ISO 8528
- Generator meets EC 60034-1, ISO 8528-3; IEC 60044-1; Declaration of conformity; EN55011, group 1, cl. B
- NFPA 110*

Power rating
- System ratings: 1770 kVA - 1780 kVA
- Accepts rated load in one step per NFPA 110*
- Generator set complies to G3 according to ISO 8528-5
- Generator set exceeds load steps according to ISO 8528-5*

Performance assurance certification (PAC)
- Engine-generator set tested to ISO 8528-5 for transient response
- 85% load factor
- Verified product design, quality and performance integrity
- All engine systems are prototype and factory tested

Complete range of accessories available
- Control panel
- Power panel
- Circuit breaker/power distribution
- Fuel system
- Fuel connections with shut-off valve mounted to base frame
- Starting/charging system
- Exhaust system
- Mechanical and electrical driven radiators
- Medium and oversized voltage alternators

Emissions
- Fuel consumption optimized

Certifications
- CE certification option
- Unit certificate acc. to VDE-AR-N 4110

* Changes to the standard parameter sets (alternator-regulator and genset-controller) are necessary

A Rolls-Royce solution

Application data [1)]

Engine

Manufacturer	***mtu***
Model	12V4000G74F
Type	4-cycle
Arrangement	12V
Displacement: l	57.2
Bore: mm	170
Stroke: mm	210
Compression ratio	16.4
Rated speed: rpm	1500
Engine governor	ECU 9
Max power: kWm	1575
Air cleaner	dry

Fuel system

Fuel specification	EN 590, Grade No.1-D/2-D (ASTM D975-00), EN 15940 (e.g. HVO)
Maximum fuel lift: m	5
Total fuel flow: l/min	16

Fuel consumption [2)]

	l/hr	g/kwh
At 100% of power rating:	358.6	189
At 75% of power rating:	276.1	194
At 50% of power rating:	189.8	200

Liquid capacity (lubrication)

Total oil system capacity: l	260
Engine jacket water capacity: l	160
Intercooler coolant capacity: l	40

Combustion air requirements

Combustion air volume: m^3/s	1.8
Max. air intake restriction: mbar	50

Cooling/radiator system

Coolant flow rate (HT circuit): m^3/hr	56
Coolant flow rate (LT circuit): m^3/hr	30
Heat rejection to coolant: kW	580
Heat radiated to charge air cooling: kW	260
Heat radiated to ambient: kW	75
Fan power for electr. radiator (40°C): kW	38

Exhaust system

Exhaust gas temp. (after turbocharger): °C	440
Exhaust gas volume: m^3/s	4.5
Maximum allowable back pressure: mbar	85
Minimum allowable back pressure: mbar	30

Standard and optional features

System ratings (kW/kVA)

Generator model	Voltage	fuel consumption optimized					
		without radiator			with mechanical radiator		
		kWel	kVA*	AMPS	kWel	kVA*	AMPS
Leroy Somer LSA52.3 S5 (Low voltage Leroy Somer standard)	380 V	1424	1780	2704	1376	1720	2613
	400 V	1424	1780	2569	1376	1720	2483
	415 V	1424	1780	2476	1376	1720	2393
Leroy Somer LSA53.2 VL6 (Medium volt. Leroy Somer)	11 kV	1416	1770	93	1376	1720	90

* cos phi = 0.8

1 All data refers only to the engine and is based on ISO standard conditions (25°C and 100m above sea level).

2 Values referenced are in accordance with ISO 3046-1. Conversion calculated with fuel density of 0.83 g/ml. All fuel consumption values refer to rated engine power.

Standard and optional features

Engine

- ■ 4-cycle
- ■ Standard single stage air filter
- ■ Oil drain extension & shut-off valve
- ■ Closed crankcase ventilation
- ■ Governor-electronic isochronous
- ■ Common rail fuel injection
- ■ Fuel consumption optimized engine

Generator

- ■ 4 pole three-phase synchronous generator
- ■ Brushless, self-excited, self-regulating, self-ventilated
- ■ Digital voltage regulator
- ■ Anti condensation heater
- ■ Stator winding Y-connected, accessible neutral (brought out)
- ■ Protection IP23
- ■ Insulation class H, utilization acc. to H
- ■ Radio suppression EN 55011, group 1, cl. B
- ■ Short circuit capability 3xIn for 10sec
- ■ Winding and bearing RTDs (without monitoring)
- ■ Excitation by AREP
- ■ Mounting of CT´s: 2 core CT´s
- ■ Winding pitch: 2/3 winding
- ■ Voltage setpoint adjustment ± 10%
- ■ Meets NEMA MG-1, BS 5000, IEC 60034-1, VDE 0530, DIN EN 12601, AS 1359 and ISO 8528-3 requirements
- ■ Leroy Somer low voltage generator
- ☐ Oversized generator
- ☐ Medium voltage generator

Oil system

- ☐ Automatic oil refilling system
- ☐ Extended test run kit (including pre-lubrication pump)

Cooling system

- ■ Jacket water pump
- ■ Thermostat(s)
- ■ Water charge air cooling
- ☐ Mechanical radiator
- ☐ Electrical driven front-end cooler
- ☐ Jacket water heater
- ☐ Jacket water heater with plate heat exchanger
- ☐ Pulley for fan drive

Control panel

- ■ Unit cabling with coded plugs for easy connection of customer-specific controls (V0)
- ☐ Pre-wired control cabinet for easy application of customized controller (V1+)
- ☐ Island operation (V2)
- ☐ Automatic mains failure operation with ATS (V3a)
- ☐ Automatic mains failure operation incl. control of generator and mains breaker (V3b)
- ☐ Island parallel operation of multiple gensets (V4)
- ☐ Automatic mains failure operation with short (< 10s) mains parallel overlap synchronization (V5)
- ☐ Mains parallel operation of a single genset (V6)
- ☐ Mains parallel operation of multiple gensets (V7)
- ☐ Basler controller
- ☐ Deif controller
- ☐ Complete system metering
- ■ Digital metering
- ■ Engine parameters
- ■ Generator protection functions
- ■ Engine protection
- ■ SAE J1939 engine ECU communications
- ■ Parametrization software
- ■ Multilingual capability
- ■ Multiple programmable contact inputs
- ■ Multiple contact outputs
- ■ Event recording
- ☐ IP 54 front panel rating with integrated gasket
- ☐ Different expansion modules
- ☐ Remote annunciator
- ☐ Daytank control
- ☐ Generator winding temperature monitoring
- ☐ Generator bearing temperature monitoring
- ☐ Modbus TCP-IP

■ Represents standard features
☐ Represents optional features

Standard and optional features

Connectivity

The engine system automatically collects and transfers engine data to the manufacturer from time to time. The data is used by the manufacturer for the purposes of product development and improvement as well as service optimization.

Users can log in or register via https://mtu-go.com and also gain insight into the data.

Power panel

- ☐ Supply electrical driven radiator from 45kW – 75kW

Circuit breaker/power distribution

- ☐ 3-pole circuit breaker
- ☐ 4-pole circuit breaker
- ☐ Electrical-actuated circuit breaker
- ☐ Base frame mounted GCB, pre-wired with generator, ready for commissioning

Fuel system

- ■ Flexible fuel connectors mounted to base frame
- ☐ Fuel filter with water separator
- ☐ Fuel filter with water separator heavy-duty
- ☐ Switchable fuel filter with water separator
- ☐ Switchable fuel filter with water separator heavy-duty
- ☐ Seperate fuel cooler
- ☐ Fuel cooler integrated into cooling equipment

Starting/charging system

- ■ 24V starter
- ☐ Redundant starting system
- ☐ Starter batteries, cables, rack, disconnect switch (lockable)
- ☐ Battery charger
- ☐ Alternator

Mounting system

- ■ Welded base frame
- ■ Resilient engine and generator mounting
- ■ Modular base frame design
- ☐ Base frame mounting on foundation/base plate with using clamping brackets
- ☐ Spring mounts with 95% degree of isolation

Exhaust system

- ☐ Exhaust bellows with connection flange
- ☐ Exhaust silencer with 10 dB(A) sound attenuation
- ☐ Exhaust silencer with 30 dB(A) sound attenuation
- ☐ Exhaust silencer with 40 dB(A) sound attenuation
- ☐ Y-connection-pipe

■ Represents standard features
☐ Represents optional features

Weights and dimensions

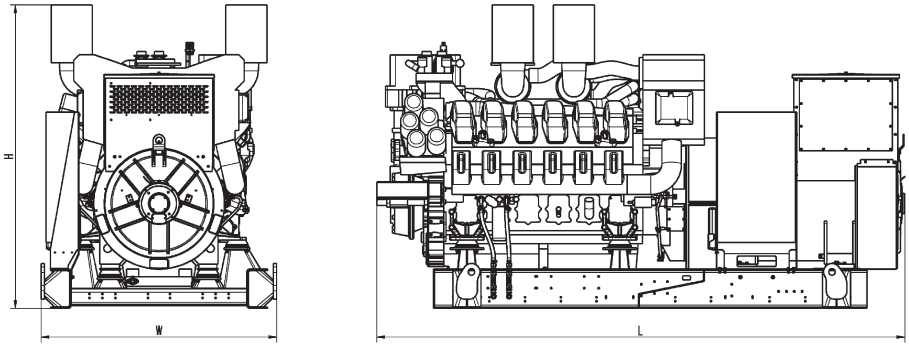

Drawing above for illustration purposes only, based on a standard open power 400 Volt engine-generator set. Lengths may vary with other voltages. Do not use for installation design. See website for unit specific template drawings.

System	Dimensions (LxWxH)	Weight (dry/less tank)
Open power unit (OPU)	4059 x 1810 x 2330 mm	10654 kg

Weights and dimensions are based on open power units and are estimates only. Consult the factory for accurate weights and dimensions for your specific engine-generator set.

Sound data

— Consult your local ***mtu*** distributor for sound data.

Emissions data

— Consult your local ***mtu*** distributor for emissions data.

Rating definitions and conditions

— Standby ratings apply to installations served by a reliable utility source. The standby rating is applicable to varying loads for the duration of a power outage. No overload capability for this rating. Ratings are in accordance with ISO 8528-1, ISO-3046-1, BS 5514 and AS 2789. Average load factor: ≤ 85%. Operating hours/year: max. 500.
— Consult your local ***mtu*** distributor for derating information.

Subject to change. | 3237551 | Edition 01/24 | BMC 2024-05.

Technical Sales Document

- Product Data -

A Rolls-Royce solution

Name	12V4000G74F	**Speed [rpm]**	1500
Application Group	3D	**Nominal power [kW]**	1575
Dataset	Ref. 25°C/55°C	**Nominal power [bhp]**	2112
		Nominal power [kVA]	-
		Nominal power [kWel]	-
		Frequency [Hz]	50
Exhaust Regulations	Fuel-consumption optimized;		

Reference conditions

No.	Description	Index	Value	Unit
6	Intake air temperature		25	°C
7	Charge-air coolant temperature		55	°C
8	Barometric pressure		1000	mbar
9	Site altitude above sea level		100	m
10	Raw-water inlet temperature		-	°C

Technical Sales Document

- Product Data -

A Rolls-Royce solution

Name	12V4000G74F	**Speed [rpm]**	1500
Application Group	3D	**Nominal power [kW]**	1575
Dataset	Ref. 25°C/55°C	**Nominal power [bhp]**	2112
		Nominal power [kVA]	-
		Nominal power [kWel]	-
		Frequency [Hz]	50
Exhaust Regulations	Fuel-consumption optimized;		

0. Data-relevant engine design configuration

No.	Description	Index	Value	Unit
8	Engine rated speed switchable (1500/1800 rpm)		-	-
12	Engine with sequential turbocharging (turbochargers with cut-in/cut-out control)		-	-
13	Engine without sequential turbocharging (turbochargers without cut-in/cut-out control)		X	-

Technical Sales Document

- Product Data -

A Rolls-Royce solution

Name	12V4000G74F	**Speed [rpm]**	1500
Application Group	3D	**Nominal power [kW]**	1575
Dataset	Ref. 25°C/55°C	**Nominal power [bhp]**	2112
		Nominal power [kVA]	-
		Nominal power [kWel]	-
		Frequency [Hz]	50
Exhaust Regulations	Fuel-consumption optimized;		

1. Power-related data

No.	Description	Index	Value	Unit
1	Engine rated speed	A	1500	rpm
2	Reduction gear - Output speed	A	-	rpm
3	Mean piston speed		10.5	m/s
5	Fuel stop power ISO 3046	A	1575	kW
9	Mean effective pressure (MEP) (Fuel stop power ISO 3046)		22.0	bar
18	Performance map No.		-	-
38	Performance map No. (cont.)		-	-
20	Performance map, amendment index		-	-

Technical Sales Document

- Product Data -

A Rolls-Royce solution

Name	12V4000G74F	**Speed [rpm]**	1500
Application Group	3D	**Nominal power [kW]**	1575
Dataset	Ref. 25°C/55°C	**Nominal power [bhp]**	2112
		Nominal power [kVA]	-
		Nominal power [kWel]	-
		Frequency [Hz]	50
Exhaust Regulations	Fuel-consumption optimized;		

2. General Conditions (for maximum power)

No.	Description	Index	Value	Unit
46	Individual power calculation (ESCM) required for maximum power		X	-
1	Intake air depression (new filter)	A	15	mbar
2	Intake air depression, max.	L	50	mbar
3	Exhaust back pressure	A	30	mbar
4	Exhaust back pressure, max.	L	85	mbar
5	Fuel temperature at fuel feed connection	R	25	°C
9	Fuel temperature at fuel feed connection, max. (w/o power reduction)	L	55	°C
10	Fuel temperature at fuel feed connection, max.	L	55	°C
18	Fuel temperature at fuel feed connection, min.	L	-	°C

Technical Sales Document

- Product Data -

A Rolls-Royce solution

Name	12V4000G74F	**Speed [rpm]**	1500
Application Group	3D	**Nominal power [kW]**	1575
Dataset	Ref. 25°C/55°C	**Nominal power [bhp]**	2112
		Nominal power [kVA]	-
		Nominal power [kWel]	-
		Frequency [Hz]	50
Exhaust Regulations	Fuel-consumption optimized;		

3. Consumption

No.	Description	Index	Value	Unit
17	Specific fuel consumption (be) - 100 % CP (+ 5 %; EN 590; 42.8 MJ/kg)	R	-	g/kWh
18	Specific fuel consumption (be) - 75 % CP (+ 5 %; EN 590; 42.8 MJ/kg)	R	-	g/kWh
19	Specific fuel consumption (be) - 50 % CP (+ 5 %; EN 590; 42.8 MJ/kg)	R	-	g/kWh
20	Specific fuel consumption (be) - 25 % CP (+ 5 %; EN 590; 42.8 MJ/kg)	R	-	g/kWh
21	Specific fuel consumption (be) - FSP (+ 5 %; EN 590; 42.8 MJ/kg)	R	-	g/kWh
56	Specific fuel consumption (be) - 100 % FSP (+ 5 %; EN 590; 42.8 MJ/kg)	R	189	g/kWh
57	Specific fuel consumption (be) - 75 % FSP (+ 5 %; EN 590; 42.8 MJ/kg)	R	194	g/kWh
58	Specific fuel consumption (be) - 50 % FSP (+ 5 %; EN 590; 42.8 MJ/kg)	R	200	g/kWh
59	Specific fuel consumption (be) - 25 % FSP (+ 5 %; EN 590; 42.8 MJ/kg)	R	228	g/kWh
73	No-load fuel consumption	R	21.0	kg/h
4335	Lube oil consumption after 24h runtime - rated power (be = Specific fuel consumption)	A	0.25	% of be
3453	Lube oil consumption in relation to the fuel consumption, max.	L	0.6	%

BL Reference value: fuel stop power
Maximum engine power that cannot be run continuously on some applications (stabilization reserve)
DL Reference value: continuous power
Engine power that can be run continuously under standard conditions

> Actual value must be greater than specified value
< Actual value must be less than specified value

X Applicable
The module is valid for this product type
- Non-applicable
The module is not valid for this product type
N Value not named
The value has not yet been named or will not be named

*** Adequate verification not yet available (tolerance +/- 10%)**
**** Adequate verification not yet available (tolerance +/- 5%)**

A Design value
Value required for the design of an external system (plant)
R Guideline value
Typical average value as information – only suitable for design purposes to a limited extent
L Limit value
A value representing the lower limit/minimum value or upper limit/maximum value that may not be exceeded. Not suitable for design purposes

Technical Sales Document

- Product Data -

A Rolls-Royce solution

Name	12V4000G74F	**Speed [rpm]**	1500
Application Group	3D	**Nominal power [kW]**	1575
Dataset	Ref. 25°C/55°C	**Nominal power [bhp]**	2112
		Nominal power [kVA]	-
		Nominal power [kWel]	-
		Frequency [Hz]	50
Exhaust Regulations	Fuel-consumption optimized;		

4. Model-related data (basic design)

No.	Description	Index	Value	Unit
1	Naturally aspirated engine		-	-
2	Engine with exhaust turbocharger (ETC)		-	-
3	Engine with exhaust turbocharger (ETC) and intercooler		X	-
4	Exhaust piping, non-cooled		X	-
5	Exhaust piping, liquid-cooled		-	-
33	Working method: four-cycle, diesel, single-acting		X	-
34	Combustion method: direct injection		X	-
36	Cooling system: conditioned water		X	-
37	Direction of rotation: c.c.w. (facing driving end)		X	-
6	Number of cylinders		12	-
7	Cylinder configuration: V angle		90	degrees (°)
8	Cylinder configuration: in-line vertical		-	-
10	Bore		170	mm
11	Stroke		210	mm
12	Displacement, cylinder		4.77	liter
13	Displacement, total		57.2	liter
14	Compression ratio		16.4	-
40	Cylinder heads: single-cylinder		X	-
41	Cylinder liners: wet, replaceable		X	-
42	Piston design: composite piston		-	-
49	Piston design: solid-skirt piston		X	-
21	Number of piston compression rings		2	-
22	Number of piston oil control rings		1	-

BL Reference value: fuel stop power
Maximum engine power that cannot be run continuously on some applications (stabilization reserve)
DL Reference value: continuous power
Engine power that can be run continuously under standard conditions

> Actual value must be greater than specified value
< Actual value must be less than specified value

X Applicable
The module is valid for this product type
- Non-applicable
The module is not valid for this product type
N Value not named
The value has not yet been named or will not be named

*** Adequate verification not yet available (tolerance +/- 10%)**
**** Adequate verification not yet available (tolerance +/- 5%)**

A Design value
Value required for the design of an external system (plant)
R Guideline value
Typical average value as information – only suitable for design purposes to a limited extent
L Limit value
A value representing the lower limit/minimum value or upper limit/maximum value that may not be exceeded. Not suitable for design purposes

Technical Sales Document

- Product Data -

A Rolls-Royce solution

Name	12V4000G74F	**Speed [rpm]**	1500
Application Group	3D	**Nominal power [kW]**	1575
Dataset	Ref. 25°C/55°C	**Nominal power [bhp]**	2112
		Nominal power [kVA]	-
		Nominal power [kWel]	-
		Frequency [Hz]	50

Exhaust Regulations Fuel-consumption optimized;

24	Number of inlet valves, per cylinder		2	-
25	Number of exhaust valves, per cylinder		2	-
15	Number of turbochargers		4	-
16	Number of L.P. turbochargers		4	-
17	Number of H.P. turbochargers		-	-
18	Number of intercoolers		1	-
19	Number of L.P. intercoolers		1	-
20	Number of H.P. intercoolers		-	-
28	Standard flywheel housing flange (engine main PTO)		00	SAE
50	Static bending moment at standard flywheel housing flange, max.	L	15	kNm
51	Dynamic bending moment at standard flywheel housing flange, max.	L	75	kNm
29	Standard flywheel housing flange (reduction gearbox main PTO)		-	SAE
43	Flywheel interface (DISC)		21	-

Technical Sales Document

- Product Data -

A Rolls-Royce solution

Name	12V4000G74F	**Speed [rpm]**	1500
Application Group	3D	**Nominal power [kW]**	1575
Dataset	Ref. 25°C/55°C	**Nominal power [bhp]**	2112
		Nominal power [kVA]	-
		Nominal power [kWel]	-
		Frequency [Hz]	50
Exhaust Regulations	Fuel-consumption optimized;		

5. Combustion air / exhaust gas

No.	Description	Index	Value	Unit
8	Charge-air pressure before cylinder - CP	R	-	bar abs
27	Charge-air pressure before cylinder - FSP	R	2.9	bar abs
9	Combustion air volume flow - CP	R	-	m³/s
10	Combustion air volume flow - FSP	R	1.8	m³/s
11	Exhaust volume flow (at exhaust temperature) - CP	R	-	m³/s
12	Exhaust volume flow (at exhaust temperature) - FSP	R	4.5	m³/s
13	Exhaust temperature before turbocharger - CP	R	-	°C
14	Exhaust temperature before turbocharger - FSP	R	670	°C
15	Exhaust temperature after turbocharger - CP	R	-	°C
16	Exhaust temperature after turbocharger - FSP	R	440	°C
17	Exhaust temperature after engine - CP	R	-	°C
18	Exhaust temperature after engine - FSP	R	460	°C

Technical Sales Document

- Product Data -

A Rolls-Royce solution

Name	12V4000G74F	**Speed [rpm]**	1500
Application Group	3D	**Nominal power [kW]**	1575
Dataset	Ref. 25°C/55°C	**Nominal power [bhp]**	2112
		Nominal power [kVA]	-
		Nominal power [kWel]	-
		Frequency [Hz]	50
Exhaust Regulations	Fuel-consumption optimized;		

6. Heat dissipation

No.	Description	Index	Value	Unit
9	Heat dissipated by engine coolant - CP with oil heat	R	-	kW
11	Heat dissipation by engine coolant - CP with oil heat, with charge-air heat	A	-	kW
60	Heat dissipated by engine coolant - CP (high-temperature circuit)	R	-	kW
61	Heat dissipated by engine coolant - CP (low-temperature circuit)	R	-	kW
13	Heat dissipated by engine coolant - CP without oil heat, with charge-air heat	R	-	kW
15	Heat dissipated by engine coolant - CP with oil heat, without charge-air heat	R	-	kW
16	Heat dissipated by engine coolant - FSP with oil heat, without charge-air heat	R	580	kW
17	Heat dissipated by engine coolant - CP without oil heat, without charge-air heat	R	-	kW
22	Heat dissipated by oil - CP	R	-	kW
24	Charge-air and oil heat dissipation - CP	R	-	kW
26	Charge-air heat dissipation - CP	R	-	kW
27	Charge-air heat dissipation - FSP	R	260	kW
38	Heat dissipated by exhaust gas - CP	R	-	kW
31	Heat dissipated by return fuel flow - CP	R	-	kW
32	Heat dissipated by return fuel flow - FSP	R	5	kW
33	Radiation and convection heat, engine - CP	R	-	kW
34	Radiation and convection heat, engine - FSP	R	75	kW
35	Radiation and convection heat, genset - CP (engine + generator + 10m insulated exhaust pipework)	R	-	kW

BL Reference value: fuel stop power
Maximum engine power that cannot be run continuously on some applications (stabilization reserve)
DL Reference value: continuous power
Engine power that can be run continuously under standard conditions

> Actual value must be greater than specified value
< Actual value must be less than specified value

X Applicable
The module is valid for this product type
- Non-applicable
The module is not valid for this product type
N Value not named
The value has not yet been named or will not be named

*** Adequate verification not yet available (tolerance +/- 10%)**
**** Adequate verification not yet available (tolerance +/- 5%)**

A Design value
Value required for the design of an external system (plant)
R Guideline value
Typical average value as information – only suitable for design purposes to a limited extent
L Limit value
A value representing the lower limit/minimum value or upper limit/maximum value that may not be exceeded. Not suitable for design purposes

Technical Sales Document

- Product Data -

A Rolls-Royce solution

Name	12V4000G74F	**Speed [rpm]**	1500
Application Group	3D	**Nominal power [kW]**	1575
Dataset	Ref. 25°C/55°C	**Nominal power [bhp]**	2112
		Nominal power [kVA]	-
		Nominal power [kWel]	-
		Frequency [Hz]	50
Exhaust Regulations	Fuel-consumption optimized;		

7. Coolant system (high-temperature circuit)

No.	Description	Index	Value	Unit
9	Coolant temperature (at engine outlet to cooling equipment; with max. 40% antifreeze)	A	-	°C
17	Coolant temperature (at engine outlet to cooling equipment)	A	100	°C
57	Coolant temperature differential after/before engine, from	R	8	K
58	Coolant temperature differential after/before engine, to	R	10	K
23	Coolant temperature differential after/before engine	L	12	K
20	Coolant temperature after engine, limit 1	L	102	°C
21	Coolant temperature after engine, limit 2	L	104	°C
25	Coolant antifreeze content, max.	L	50	%
30	Cooling equipment: coolant flow rate	A	56	m^3/h
31	Coolant pump: pressure differential	R	2.5	bar
35	Coolant pump: inlet pressure, min.	L	0.5	bar
36	Coolant pump: inlet pressure, max.	L	2.5	bar
39	Engine: coolant pressure differential with thermostat	R	2.0	bar
41	Pressure loss in off-engine cooling system, max.	L	0.7	bar
72	Pressure loss in off-engine cooling system, min.	L	0.55	bar
43	Pressure loss in off-engine cooling system, max. without thermostat	L	0.7	bar
70	Pressure loss in off-engine cooling system, min. without thermostat	L	0.55	bar
45	Flow resistance (X) coefficient engine w/ thermostat, w/o cooling equipment	R	0.80	$mbar/(m^3/h)^2$

BL Reference value: fuel stop power
Maximum engine power that cannot be run continuously on some applications (stabilization reserve)
DL Reference value: continuous power
Engine power that can be run continuously under standard conditions

> Actual value must be greater than specified value
< Actual value must be less than specified value

X Applicable
The module is valid for this product type
- Non-applicable
The module is not valid for this product type
N Value not named
The value has not yet been named or will not be named

*** Adequate verification not yet available (tolerance +/- 10%)**
**** Adequate verification not yet available (tolerance +/- 5%)**

A Design value
Value required for the design of an external system (plant)
R Guideline value
Typical average value as information – only suitable for design purposes to a limited extent
L Limit value
A value representing the lower limit/minimum value or upper limit/maximum value that may not be exceeded. Not suitable for design purposes

Technical Sales Document

- Product Data -

A Rolls-Royce solution

Name	12V4000G74F	**Speed [rpm]**	1500
Application Group	3D	**Nominal power [kW]**	1575
Dataset	Ref. 25°C/55°C	**Nominal power [bhp]**	2112
		Nominal power [kVA]	-
		Nominal power [kWel]	-
		Frequency [Hz]	50

Exhaust Regulations Fuel-consumption optimized;

47	Breather valve (expansion tank) opening pressure (excess pressure)	R	1.0	bar
54	Cooling equipment: height above engine, max.	L	15	m
53	Cooling equipment: operating pressure	A	2.5	bar
73	Coolant level in expansion tank, below min. alarm	L	-	-
74	Coolant level in expansion tank, below min. shutdown	L	X	-
50	Thermostat, starts to open	R	79	°C
51	Thermostat, bypass closed	R	92	°C
52	Thermostat, fully open	R	92	°C
48	Breather valve (expansion tank) opening pressure (depression)	R	-0.1	bar
49	Pressure in cooling system, max.	L	5.0	bar

Technical Sales Document

- Product Data -

A Rolls-Royce solution

Name	12V4000G74F	**Speed [rpm]**	1500
Application Group	3D	**Nominal power [kW]**	1575
Dataset	Ref. 25°C/55°C	**Nominal power [bhp]**	2112
		Nominal power [kVA]	-
		Nominal power [kWel]	-
		Frequency [Hz]	50
Exhaust Regulations	Fuel-consumption optimized;		

8. Coolant system (low-temperature circuit)

No.	Description	Index	Value	Unit
53	Coolant temperature (at engine outlet to cooling equipment)	R	65	°C
9	Coolant temperature before intercooler (at engine inlet from cooling equipment)	A	55	°C
14	Coolant temperature before intercooler, limit 1	L	75	°C
61	Coolant temperature before intercooler, shutdown	L	-	°C
15	Coolant temperature before intercooler, limit 2	L	-	°C
54	Coolant temperature differential after/before intercooler, min.	L	8	K
55	Coolant temperature differential after/before intercooler, max.	L	12	K
13	Coolant antifreeze content, max.	L	50	%
17	Charge-air temperature after intercooler, max.	L	80	°C
76	Temperature differential between intake air and charge-air coolant before intercooler	A	30	K
75	Temperature differential between intake air and charge-air coolant before intercooler, max.	L	32	K
45	Charge-air temperature after intercooler, max. for compliance with "TA-Luft" at CP	L	-	°C
56	Coolant pump: flow rate	A	30	m³/h
20	Cooling equipment: coolant flow rate	A	30	m³/h
21	Intercooler: coolant flow rate	R	30	m³/h
22	Coolant pump: pressure differential	R	1.4	bar
24	Coolant pump: inlet pressure, min.	L	0.5	bar
25	Coolant pump: inlet pressure, max.	L	2.5	bar
29	Pressure loss in off-engine cooling system, max.	L	0.7	bar
62	Pressure loss in off-engine cooling system, min.	L	0.55	bar

BL Reference value: fuel stop power
Maximum engine power that cannot be run continuously on some applications (stabilization reserve)
DL Reference value: continuous power
Engine power that can be run continuously under standard conditions

> Actual value must be greater than specified value
< Actual value must be less than specified value

X Applicable
The module is valid for this product type
- Non-applicable
The module is not valid for this product type
N Value not named
The value has not yet been named or will not be named

*** Adequate verification not yet available (tolerance +/- 10%)**
**** Adequate verification not yet available (tolerance +/- 5%)**

A Design value
Value required for the design of an external system (plant)
R Guideline value
Typical average value as information – only suitable for design purposes to a limited extent
L Limit value
A value representing the lower limit/minimum value or upper limit/maximum value that may not be exceeded. Not suitable for design purposes

Technical Sales Document

- Product Data -

A Rolls-Royce solution

Name	12V4000G74F	**Speed [rpm]**	1500
Application Group	3D	**Nominal power [kW]**	1575
Dataset	Ref. 25°C/55°C	**Nominal power [bhp]**	2112
		Nominal power [kVA]	-
		Nominal power [kWel]	-
		Frequency [Hz]	50

Exhaust Regulations Fuel-consumption optimized;

31	Pressure loss in off-engine cooling system, max. without thermostat	L	0.7	bar
63	Pressure loss in off-engine cooling system, min. without thermostat	L	0.55	bar
43	Cooling equipment: height above engine, max.	L	15	m
36	Breather valve (expansion tank) opening pressure (excess pressure)	R	1.0	bar
37	Breather valve (expansion tank) opening pressure (depression)	R	-0.1	bar
42	Cooling equipment: operating pressure	A	2.5	bar
67	Coolant level in expansion tank, below min. alarm	L	-	-
68	Coolant level in expansion tank, below min. shutdown	L	X	-
39	Thermostat, starts to open	R	38	°C
40	Thermostat, bypass closed	R	51	°C
41	Thermostat, fully open	R	51	°C

BL Reference value: fuel stop power
Maximum engine power that cannot be run continuously on some applications (stabilization reserve)
DL Reference value: continuous power
Engine power that can be run continuously under standard conditions

> Actual value must be greater than specified value
< Actual value must be less than specified value

X Applicable
The module is valid for this product type
- Non-applicable
The module is not valid for this product type
N Value not named
The value has not yet been named or will not be named

*** Adequate verification not yet available (tolerance +/- 10%)**
**** Adequate verification not yet available (tolerance +/- 5%)**

A Design value
Value required for the design of an external system (plant)
R Guideline value
Typical average value as information – only suitable for design purposes to a limited extent
L Limit value
A value representing the lower limit/minimum value or upper limit/maximum value that may not be exceeded. Not suitable for design purposes

Technical Sales Document

- Product Data -

A Rolls-Royce solution

Name	12V4000G74F	**Speed [rpm]**	1500
Application Group	3D	**Nominal power [kW]**	1575
Dataset	Ref. 25°C/55°C	**Nominal power [bhp]**	2112
		Nominal power [kVA]	-
		Nominal power [kWel]	-
		Frequency [Hz]	50
Exhaust Regulations	Fuel-consumption optimized;		

10. Lube oil system

No.	Description	Index	Value	Unit
1	Lube oil operating temp. before engine, from	R	88	°C
2	Lube oil operating temp. before engine, to	R	98	°C
3	Lube oil operating temp. after engine, from	R	98	°C
4	Lube oil operating temp. after engine, to	R	108	°C
5	Lube oil temperature before engine, limit 1	L	99	°C
6	Lube oil temperature before engine, limit 2	L	101	°C
7	Lube oil operating pressure before engine (measuring block)	R	5.9	bar
8	Lube oil operating press. bef. engine, from	R	5.0	bar
9	Lube oil operating press. bef. engine, to	R	7.0	bar
10	Lube oil pressure before engine, alarm	L	-	bar
33	Lube oil pressure before engine, limit 1(speed-related value, consult Rolls-Royce Solutions GmbH)	L	3.5	bar
11	Lube oil pressure before engine, shutdown	L	-	bar
34	Lube oil pressure before engine, limit 2 (speed-related value, consult Rolls-Royce Solutions GmbH)	L	3.2	bar
17	Lube oil pump(s): oil flow, total	R	625	liter/min
19	Lube oil fine filter (main circuit): number of units		1	-
20	Lube oil fine filter (main circuit): number of elements per unit		5	-
21	Lube oil fine filter (main circuit): particle retention	R	0.014	mm
32	Lube oil fine filter (main circuit): pressure differential, max.	L	1.5	bar
35	Lube oil fine filter (main circuit): make (standard): MANN & HUMMEL		X	-

BL Reference value: fuel stop power
Maximum engine power that cannot be run continuously on some applications (stabilization reserve)
DL Reference value: continuous power
Engine power that can be run continuously under standard conditions

> Actual value must be greater than specified value
< Actual value must be less than specified value

X Applicable
The module is valid for this product type
- Non-applicable
The module is not valid for this product type
N Value not named
The value has not yet been named or will not be named

*** Adequate verification not yet available (tolerance +/- 10%)**
**** Adequate verification not yet available (tolerance +/- 5%)**

A Design value
Value required for the design of an external system (plant)
R Guideline value
Typical average value as information – only suitable for design purposes to a limited extent
L Limit value
A value representing the lower limit/minimum value or upper limit/maximum value that may not be exceeded. Not suitable for design purposes

Technical Sales Document

- Product Data -

A Rolls-Royce solution

Name	12V4000G74F	**Speed [rpm]**	1500
Application Group	3D	**Nominal power [kW]**	1575
Dataset	Ref. 25°C/55°C	**Nominal power [bhp]**	2112
		Nominal power [kVA]	-
		Nominal power [kWel]	-
		Frequency [Hz]	50
Exhaust Regulations	Fuel-consumption optimized;		

11. Fuel system

No.	Description	Index	Value	Unit
1	Fuel pressure at engine fuel feed connection, min. (when engine is starting)	L	-0.1	bar
2	Fuel pressure at engine fuel feed connection, max. (when engine is starting)	L	1.5	bar
57	Fuel pressure at engine fuel feed connection, min. (when engine is running)	L	-0.3	bar
65	Fuel pressure at engine fuel feed connection, max. (when engine is running)	L	0.5	bar
4211	Max. fuel supply volume Normal mode	A	12.1	liter/min
4212	Fuel supply volume, max. Fault mode	A	22.6	liter/min
4	Fuel pressure before injection pump, from (high-pressure pump)	R	6.0	bar
5	Fuel pressure before injection pump, to (high-pressure pump)	R	7.5	bar
6	Fuel pressure before injection pump, min. (high-pressure pump)	L	5.0	bar
7	Fuel pressure before injection pump with engine not running, max. (high-pressure pump)	L	1.5	bar
4213	Max. fuel return volume Normal mode	A	3.8	liter/min
4214	Fuel return volume, max. Fault mode	A	22.3	liter/min
10	Fuel pressure at return connection on engine, max.	L	0.5	bar
12	Fuel temperature differential before/after engine	R	30	K
38	Fuel temperature after high-pressure pump, alarm	L	100	°C
15	Fuel prefilter: number of units	A	-	-
16	Fuel prefilter: number of elements per unit	A	-	-

BL Reference value: fuel stop power
Maximum engine power that cannot be run continuously on some applications (stabilization reserve)
DL Reference value: continuous power
Engine power that can be run continuously under standard conditions

> Actual value must be greater than specified value
< Actual value must be less than specified value

X Applicable
The module is valid for this product type
- Non-applicable
The module is not valid for this product type
N Value not named
The value has not yet been named or will not be named

*** Adequate verification not yet available (tolerance +/- 10%)**
**** Adequate verification not yet available (tolerance +/- 5%)**

A Design value
Value required for the design of an external system (plant)
R Guideline value
Typical average value as information – only suitable for design purposes to a limited extent
L Limit value
A value representing the lower limit/minimum value or upper limit/maximum value that may not be exceeded. Not suitable for design purposes

Technical Sales Document

- Product Data -

A Rolls-Royce solution

Name	12V4000G74F	**Speed [rpm]**	1500
Application Group	3D	**Nominal power [kW]**	1575
Dataset	Ref. 25°C/55°C	**Nominal power [bhp]**	2112
		Nominal power [kVA]	-
		Nominal power [kWel]	-
		Frequency [Hz]	50

Exhaust Regulations Fuel-consumption optimized;

17	Fuel prefilter: particle retention	A	-	mm
29	Fuel prefilter: make (standard): MANN & HUMMEL		-	-
18	Fuel fine filter (main circuit): number of units	A	1	-
19	Fuel fine filter (main circuit): number of elements per unit	A	1	-
20	Fuel fine filter (main circuit): particle retention	A	0.005	mm
21	Fuel fine filter (main circuit): pressure differential, max.	L	1.0	bar
32	Fuel fine filter (main circuit): make (standard): MANN & HUMMEL		X	-

Technical Sales Document

- Product Data -

A Rolls-Royce solution

Name	12V4000G74F	**Speed [rpm]**	1500
Application Group	3D	**Nominal power [kW]**	1575
Dataset	Ref. 25°C/55°C	**Nominal power [bhp]**	2112
		Nominal power [kVA]	-
		Nominal power [kWel]	-
		Frequency [Hz]	50
Exhaust Regulations	Fuel-consumption optimized;		

12. General operating data

No.	Description	Index	Value	Unit
1	Cold start capability: air temperature (w/o starting aid, w/o preheating) - (case A)	R	10	°C
2	Additional condition (to case A): engine coolant temperature	R	10	°C
3	Additional condition (to case A): lube oil temperature	R	10	°C
4	Additional condition (to case A): lube oil viscosity	R	15W40	SAE
9	Cold start capability: air temperature (w/o starting aid, w/ preheating) - (case C)	R	0	°C
10	Additional condition (to case C): engine coolant temperature	R	40	°C
11	Additional condition (to case C): lube oil temperature	R	-10	°C
12	Additional condition (to case C): lube oil viscosity	R	15W40	SAE
21	Coolant preheating, heater performance (standard)	R	9	kW
22	Coolant preheating, preheating temperature, min.	L	32	°C
3506	Coolant preheating, preheating temperature, max.	L	55	°C
23	Lube oil priming pump: flow rate	R	N	liter/min
24	Lube oil priming pump: pressure	R	N	bar
25	Lube oil priming pump: rated power	R	N	kW
26	Lube oil priming pump: cut-in interval pump cut-in every ... minutes	R	N	min
27	Lube oil priming pump: cut-in duration	R	N	min
28	Breakaway torque (without driven machinery) coolant temperature +5°C	R	1650	Nm
30	Breakaway torque (without driven machinery) coolant temperature +40°C	R	1300	Nm
29	Cranking torque at firing speed (without driven machinery) coolant temperature +5°C	R	900	Nm

BL Reference value: fuel stop power
Maximum engine power that cannot be run continuously on some applications (stabilization reserve)
DL Reference value: continuous power
Engine power that can be run continuously under standard conditions

> Actual value must be greater than specified value
< Actual value must be less than specified value

X Applicable
The module is valid for this product type
- Non-applicable
The module is not valid for this product type
N Value not named
The value has not yet been named or will not be named

*** Adequate verification not yet available (tolerance +/- 10%)**
**** Adequate verification not yet available (tolerance +/- 5%)**

A Design value
Value required for the design of an external system (plant)
R Guideline value
Typical average value as information – only suitable for design purposes to a limited extent
L Limit value
A value representing the lower limit/minimum value or upper limit/maximum value that may not be exceeded. Not suitable for design purposes

Technical Sales Document

- Product Data -

A Rolls-Royce solution

Name	12V4000G74F	**Speed [rpm]**	1500
Application Group	3D	**Nominal power [kW]**	1575
Dataset	Ref. 25°C/55°C	**Nominal power [bhp]**	2112
		Nominal power [kVA]	-
		Nominal power [kWel]	-
		Frequency [Hz]	50

Exhaust Regulations Fuel-consumption optimized;

31	Cranking torque at firing speed (without driven machinery) coolant temperature +40°C	R	660	Nm
96	Starting is blocked if the engine coolant temperature is below		0	°C
92	Run-up period to rated speed (without driven machinery)	R	N	s
93	Run-up period to rated speed (with driven machinery) (* at general conditions)	R	6	s
37	High idling speed, max. (static)	L	1700	rpm
38	Limit speed for overspeed alarm / emergency shutdown	L	1950	rpm
39	Limit speed for overspeed alarm	L	1950	rpm
42	Firing speed, from	R	80	rpm
43	Firing speed, to	R	120	rpm
44	Engine coolant temperature before starting full-load operation, recommended min. (for emergency/standby sets with coolant preheating the minimum preheating temperature referred to extended property No.22 is sufficient)	R	60	°C
3515	Minimum continuous load (operation > 10h)	R	30	kW/cyl.
49	Extended low or no-load operation possible (consultation required)		X	-
50	Engine mass moment of inertia (without flywheel)	R	9.7	kgm²
52	Standard flywheel mass moment of inertia	R	10.25	kgm²
51	Engine mass moment of inertia (with standard flywheel)	R	19.95	kgm²
69	Speed droop (with electronic governor) adjustable, from	R	0	%
70	Speed droop (with electronic governor) adjustable, to	R	10	%
95	Number of starter ring-gear teeth on engine flywheel		182	-

BL Reference value: fuel stop power
Maximum engine power that cannot be run continuously on some applications (stabilization reserve)
DL Reference value: continuous power
Engine power that can be run continuously under standard conditions

> Actual value must be greater than specified value
< Actual value must be less than specified value

X Applicable
The module is valid for this product type
- Non-applicable
The module is not valid for this product type
N Value not named
The value has not yet been named or will not be named

*** Adequate verification not yet available (tolerance +/- 10%)**
**** Adequate verification not yet available (tolerance +/- 5%)**

A Design value
Value required for the design of an external system (plant)
R Guideline value
Typical average value as information – only suitable for design purposes to a limited extent
L Limit value
A value representing the lower limit/minimum value or upper limit/maximum value that may not be exceeded. Not suitable for design purposes

Technical Sales Document

- Product Data -

A Rolls-Royce solution

Name	12V4000G74F	**Speed [rpm]**	1500
Application Group	3D	**Nominal power [kW]**	1575
Dataset	Ref. 25°C/55°C	**Nominal power [bhp]**	2112
		Nominal power [kVA]	-
		Nominal power [kWel]	-
		Frequency [Hz]	50
Exhaust Regulations	Fuel-consumption optimized;		

13. Starting (electric)

No.	Description	Index	Value	Unit
2309	Manufacturer		Delco	-
4101	Type		50MT	-
2310	Number of starter		2	-
2312	Starter electrically redundant		-	-
2313	Rated power per starter	R	9	kW
2314	Starter, rated voltage	R	24	VDC
2315	Rated short-circuit current per starter	L	1900	A
2316	Power consumption per starter (at an engine speed of 100 rpm)	R	580	A
2317	Internal resistance of power supply + line resistance per starter	A	0.008	Ω
2318	Manufacturer		Bosch	-
4118	Type		HEP	-
2319	Number of starter		2	-
2320	Starter electrically redundant		-	-
2321	Rated power per starter	R	11.3	kW
2322	Starter, rated voltage	R	24	VDC
2323	Rated short-circuit current per starter	L	2190	A
2324	Power consumption per starter (at an engine speed of 100 rpm)	R	750	A
2325	Internal resistance of power supply + line resistance per starter	A	0.0047	Ω
2326	Manufacturer		Prestolite	-
4119	Type		S-152	-
2327	Number of starter		1	-
2328	Starter electrically redundant		-	-

BL Reference value: fuel stop power
Maximum engine power that cannot be run continuously on some applications (stabilization reserve)
DL Reference value: continuous power
Engine power that can be run continuously under standard conditions

> Actual value must be greater than specified value
< Actual value must be less than specified value

X Applicable
The module is valid for this product type
- Non-applicable
The module is not valid for this product type
N Value not named
The value has not yet been named or will not be named

*** Adequate verification not yet available (tolerance +/- 10%)**
**** Adequate verification not yet available (tolerance +/- 5%)**

A Design value
Value required for the design of an external system (plant)
R Guideline value
Typical average value as information – only suitable for design purposes to a limited extent
L Limit value
A value representing the lower limit/minimum value or upper limit/maximum value that may not be exceeded. Not suitable for design purposes

Technical Sales Document

- Product Data -

A Rolls-Royce solution

Name	12V4000G74F	**Speed [rpm]**	1500
Application Group	3D	**Nominal power [kW]**	1575
Dataset	Ref. 25°C/55°C	**Nominal power [bhp]**	2112
		Nominal power [kVA]	-
		Nominal power [kWel]	-
		Frequency [Hz]	50

Exhaust Regulations Fuel-consumption optimized;

2329	Rated power per starter	R	15	kW
2330	Starter, rated voltage	R	24	VDC
2331	Rated short-circuit current per starter	L	3000	A
2332	Power consumption per starter (at an engine speed of 100 rpm)	R	1400	A
2333	Internal resistance of power supply + line resistance per starter	A	0.0049	Ω
2334	Manufacturer		Prestolite	-
4120	Type		S-152	-
2335	Number of starter		2	-
2336	Starter electrically redundant		X	-
2337	Rated power per starter	R	15	kW
2338	Starter, rated voltage	R	24	VDC
2339	Rated short-circuit current per starter	L	3000	A
2340	Power consumption per starter (at an engine speed of 100 rpm)	R	1400	A
2341	Internal resistance of power supply + line resistance per starter	A	0.0049	Ω
3374	Manufacturer		Prestolite	-
4121	Type		MS7	-
3375	Number of starter		2	-
3376	Starter electrically redundant		-	-
3377	Rated power per starter	R	9	kW
3378	Starter, rated voltage	R	24	VDC
3379	Rated short-circuit current per starter	L	1900	A
3380	Power consumption per starter (at an engine speed of 100 rpm)	R	530	A
3383	Internal resistance of power supply + line resistance per starter	A	0.005	Ω
4104	Manufacturer		Prestolite	-

BL Reference value: fuel stop power
Maximum engine power that cannot be run continuously on some applications (stabilization reserve)
DL Reference value: continuous power
Engine power that can be run continuously under standard conditions

> Actual value must be greater than specified value
< Actual value must be less than specified value

X Applicable
The module is valid for this product type
- Non-applicable
The module is not valid for this product type
N Value not named
The value has not yet been named or will not be named

*** Adequate verification not yet available (tolerance +/- 10%)**
**** Adequate verification not yet available (tolerance +/- 5%)**

A Design value
Value required for the design of an external system (plant)
R Guideline value
Typical average value as information – only suitable for design purposes to a limited extent
L Limit value
A value representing the lower limit/minimum value or upper limit/maximum value that may not be exceeded. Not suitable for design purposes

Technical Sales Document

- Product Data -

A Rolls-Royce solution

Name	12V4000G74F	**Speed [rpm]**	1500
Application Group	3D	**Nominal power [kW]**	1575
Dataset	Ref. 25°C/55°C	**Nominal power [bhp]**	2112
		Nominal power [kVA]	-
		Nominal power [kWel]	-
		Frequency [Hz]	50

Exhaust Regulations Fuel-consumption optimized;

4105	Type		M128R	-
4106	Number of starter		2	-
4107	Starter electrically redundant		-	-
4108	Rated power per starter	R	9.4	kW
4109	Starter, rated voltage	R	24	VDC
4110	Rated short-circuit current per starter	L	2000	A
4111	Power consumption per starter (at an engine speed of 100 rpm)	R	600	A
4112	Power consumption per starter (at an engine speed of 100 rpm, SAE0)	R	-	A
4113	Power consumption per starter (at an engine speed of 100 rpm, SAE1)	R	-	A
4114	Internal resistance of power supply + line resistance per starter	A	0.008	Ω
2347	Generally valid data for starter		X	-
2342	Rated starting-attempt Duration (at +20°C ambient temperature with battery full)	R	5	s
2343	Interval between starts (at rated starting-attempt duration), min.	L	20	s
2345	Maximum acceptable starting-attempt duration	L	15	s
2344	Interval between starts (when starting-attempt duration > rated starting-attempt duration)	R	60	s
2346	Starting attempts within 30 minutes (at +20°C ambient temperature with battery full), max.	L	6	-
3565	Disengagement of starter pinion at engine Speed Note: Exceeding the guideline value of the disengagement speed will reduce the life cycle of the starter depending on how often and how much the speed has been exceeded	R	400	rpm
3566	Disengagement of starter pinion at engine speed, max.	L	500	rpm

BL Reference value: fuel stop power
Maximum engine power that cannot be run continuously on some applications (stabilization reserve)
DL Reference value: continuous power
Engine power that can be run continuously under standard conditions

> Actual value must be greater than specified value
< Actual value must be less than specified value

X Applicable
The module is valid for this product type
- Non-applicable
The module is not valid for this product type
N Value not named
The value has not yet been named or will not be named

*** Adequate verification not yet available (tolerance +/- 10%)**
**** Adequate verification not yet available (tolerance +/- 5%)**

A Design value
Value required for the design of an external system (plant)
R Guideline value
Typical average value as information – only suitable for design purposes to a limited extent
L Limit value
A value representing the lower limit/minimum value or upper limit/maximum value that may not be exceeded. Not suitable for design purposes

Technical Sales Document

- Product Data -

A Rolls-Royce solution

Name	12V4000G74F	**Speed [rpm]**	1500
Application Group	3D	**Nominal power [kW]**	1575
Dataset	Ref. 25°C/55°C	**Nominal power [bhp]**	2112
		Nominal power [kVA]	-
		Nominal power [kWel]	-
		Frequency [Hz]	50
Exhaust Regulations	Fuel-consumption optimized;		

14. Starting (air in cylinder)

No.	Description	Index	Value	Unit
1	Starting air pressure before engine, min.	R	-	bar
2	Starting air pressure before engine, max.	R	-	bar
3	Starting air pressure before engine, min.	L	-	bar
4	Starting air pressure before engine, max.	L	-	bar
20	Start attempt duration (engine preheated)	R	-	s
21	Start attempt duration (engine not preheated)	R	-	s
22	Start attempt duration	L	-	s
23	Air consumption / start attempt (engine preheated)	R	-	m^3n
24	Air consumption / start attempt (engine not preheated)	R	-	m^3n
25	Starting air tank for 3 start attempts (max. 40 bar) (engine preheated)	R	-	liter
26	Starting air tank for 3 start attempts (max. 30 bar) (engine preheated)	R	-	liter
27	Starting air tank for 6 start attempts (max. 40 bar) (engine preheated)	R	-	liter
28	Starting air tank for 6 start attempts (max. 30 bar) (engine preheated)	R	-	liter
29	Starting air tank for 10 start attempts (max. 40 bar) (engine preheated)	R	-	liter
30	Starting air tank for 10 start attempts (max. 30 bar) (engine preheated)	R	-	liter
31	Starting air tank for 3 start attempts (max. 40 bar) (engine not preheated)	R	-	liter
32	Starting air tank for 3 start attempts (max. 30 bar) (engine not preheated)	R	-	liter
33	Starting air tank for 6 start attempts (max. 40 bar) (engine not preheated)	R	-	liter

Technical Sales Document

- Product Data -

A Rolls-Royce solution

Name	12V4000G74F	**Speed [rpm]**	1500
Application Group	3D	**Nominal power [kW]**	1575
Dataset	Ref. 25°C/55°C	**Nominal power [bhp]**	2112
		Nominal power [kVA]	-
		Nominal power [kWel]	-
		Frequency [Hz]	50

Exhaust Regulations Fuel-consumption optimized;

34	Starting air tank for 6 start attempts (max. 30 bar) (engine not preheated)	R	-	liter
35	Starting air tank for 10 start attempts (max. 40 bar) (engine not preheated)	R	-	liter
36	Starting air tank for 10 start attempts (max. 30 bar) (engine not preheated)	R	-	liter

Technical Sales Document

- Product Data -

A Rolls-Royce solution

Name	12V4000G74F	**Speed [rpm]**	1500
Application Group	3D	**Nominal power [kW]**	1575
Dataset	Ref. 25°C/55°C	**Nominal power [bhp]**	2112
		Nominal power [kVA]	-
		Nominal power [kWel]	-
		Frequency [Hz]	50
Exhaust Regulations	Fuel-consumption optimized;		

15. Starting (pneumatic/oil pressure starter)

No.	Description	Index	Value	Unit
35	Pneumatic starter: make Gali		-	-
36	Pneumatic starter: make TDI		X	-
5	Starting air pressure before starter motor, min.	R	8	bar
6	Starting air pressure before starter motor, max.	R	9	bar
7	Starting air pressure before starter motor, min.	L	8	bar
8	Starting air pressure before starter motor, max.	L	9	bar
18	Start attempt duration (engine preheated)	R	3	s
19	Start attempt duration (engine not preheated)	R	5	s
20	Start attempt duration, max.	L	-	s
114	Air consumption/start attempt (engine preheated) Engine without generator Control with engine controller	R	1.1	m³n
115	Air consumption/start attempt (engine not preheated) Engine without generator Control with engine controller	R	1.2	m³n
116	Air consumption with external control for air-starter (per second	R	0.6	m³n
23	Starting air tank for 3 start attempts (max. 40 bar) (engine preheated)	R	-	liter
24	Starting air tank for 3 start attempts (max. 30 bar) (engine preheated)	R	-	liter
25	Starting air tank for 6 start attempts (max. 40 bar) (engine preheated)	R	-	liter
26	Starting air tank for 6 start attempts (max. 30 bar) (engine preheated)	R	-	liter
27	Starting air tank for 10 start attempts (max. 40 bar) (engine preheated)	R	-	liter

BL Reference value: fuel stop power
Maximum engine power that cannot be run continuously on some applications (stabilization reserve)
DL Reference value: continuous power
Engine power that can be run continuously under standard conditions

> Actual value must be greater than specified value
< Actual value must be less than specified value

X Applicable
The module is valid for this product type
- Non-applicable
The module is not valid for this product type
N Value not named
The value has not yet been named or will not be named

*** Adequate verification not yet available (tolerance +/- 10%)**
**** Adequate verification not yet available (tolerance +/- 5%)**

A Design value
Value required for the design of an external system (plant)
R Guideline value
Typical average value as information – only suitable for design purposes to a limited extent
L Limit value
A value representing the lower limit/minimum value or upper limit/maximum value that may not be exceeded. Not suitable for design purposes

Technical Sales Document

- Product Data -

A Rolls-Royce solution

Name	12V4000G74F	**Speed [rpm]**	1500
Application Group	3D	**Nominal power [kW]**	1575
Dataset	Ref. 25°C/55°C	**Nominal power [bhp]**	2112
		Nominal power [kVA]	-
		Nominal power [kWel]	-
		Frequency [Hz]	50

Exhaust Regulations Fuel-consumption optimized;

28	Starting air tank for 10 start attempts (max. 30 bar) (engine preheated)	R	-	liter
29	Starting air tank for 3 start attempts (max. 40 bar) (engine not preheated)	R	N	liter
30	Starting air tank for 3 start attempts (max. 30 bar) (engine not preheated)	R	N	liter
31	Starting air tank for 6 start attempts (max. 40 bar) (engine not preheated)	R	N	liter
32	Starting air tank for 6 start attempts (max. 30 bar) (engine not preheated)	R	N	liter
33	Starting air tank for 10 start attempts (max. 40 bar) (engine not preheated)	R	N	liter
34	Starting air tank for 10 start attempts (max. 30 bar) (engine not preheated)	R	N	liter
101	Hydraulic starter: make Huegli		X	-
102	Starting oil pressure before starter motor, min.	R	107	bar
103	Starting oil pressure before starter motor, max.	R	207	bar
104	Starting oil pressure before starter motor, min.	L	107	bar
105	Starting oil pressure before starter motor, max.	L	207	bar
107	Start attempt duration (engine not preheated)	R	N	s
108	Start attempt duration, max.	L	N	s
109	Hydraulic oil consumption / start attempt (engine preheated)	R	N	liter
110	Hydraulic oil consumption / start attempt (engine not preheated)	R	N	liter
111	Minimum specification of hydraulic oil viscosity	R	MilSpec 5606	-

BL **Reference value: fuel stop power**
Maximum engine power that cannot be run continuously on some applications (stabilization reserve)
DL **Reference value: continuous power**
Engine power that can be run continuously under standard conditions

> **Actual value must be greater than specified value**
< **Actual value must be less than specified value**

X **Applicable**
The module is valid for this product type
- **Non-applicable**
The module is not valid for this product type
N **Value not named**
The value has not yet been named or will not be named

* **Adequate verification not yet available (tolerance +/- 10%)**
** **Adequate verification not yet available (tolerance +/- 5%)**

A **Design value**
Value required for the design of an external system (plant)
R **Guideline value**
Typical average value as information – only suitable for design purposes to a limited extent
L **Limit value**
A value representing the lower limit/minimum value or upper limit/maximum value that may not be exceeded. Not suitable for design purposes

Technical Sales Document

- Product Data -

A Rolls-Royce solution

Name	12V4000G74F	**Speed [rpm]**	1500
Application Group	3D	**Nominal power [kW]**	1575
Dataset	Ref. 25°C/55°C	**Nominal power [bhp]**	2112
		Nominal power [kVA]	-
		Nominal power [kWel]	-
		Frequency [Hz]	50
Exhaust Regulations	Fuel-consumption optimized;		

16. Inclinations - standard oil system (ref.: waterline)

No.	Description	Index	Value	Unit
15	Longitudinal inclination, continuous max. driving end down (Option: max. operating inclinations)	L	5	degrees (°)
16	Longitudinal inclination, temporary max. driving end down (Option: max. operating inclinations)	L	-	degrees (°)
17	Longitudinal inclination, continuous max. driving end up (Option: max. operating inclinations)	L	5	degrees (°)
18	Longitudinal inclination, temporary max. driving end up (Option: max. operating inclinations)	L	-	degrees (°)
19	Transverse inclination, continuous max. (Option: max. operating inclinations)	L	10	degrees (°)
20	Transverse inclination, temporary max. (Option: max. operating inclinations)	L	-	degrees (°)

Technical Sales Document

- Product Data -

A Rolls-Royce solution

Name	12V4000G74F	**Speed [rpm]**	1500
Application Group	3D	**Nominal power [kW]**	1575
Dataset	Ref. 25°C/55°C	**Nominal power [bhp]**	2112
		Nominal power [kVA]	-
		Nominal power [kWel]	-
		Frequency [Hz]	50
Exhaust Regulations	Fuel-consumption optimized;		

17. Inclinations - special oil system (ref.: waterline)

No.	Description	Index	Value	Unit
1	Longitudinal inclination, continuous max.	L	-	degrees (°)
7	Transverse inclination, continuous max.	L	-	degrees (°)

Technical Sales Document

- Product Data -

A Rolls-Royce solution

Name	12V4000G74F	**Speed [rpm]**	1500
Application Group	3D	**Nominal power [kW]**	1575
Dataset	Ref. 25°C/55°C	**Nominal power [bhp]**	2112
		Nominal power [kVA]	-
		Nominal power [kWel]	-
		Frequency [Hz]	50
Exhaust Regulations	Fuel-consumption optimized;		

18. Capacities

No.	Description	Index	Value	Unit
1	Engine coolant capacity (without cooling equipment)	R	160	liter
10	Intercooler coolant capacity	R	40	liter
11	On-engine fuel capacity	R	7	liter
14	Engine oil capacity, initial filling (standard oil system) (Option: max. operating inclinations)	R	222	liter
20	Oil change quantity, max. (standard oil system) (Option: max. operating inclinations)	R	208	liter
28	Oil pan capacity, dipstick mark min. (standard oil system) (Option: max. operating inclinations)	L	156	liter
29	Oil pan capacity, dipstick mark max. (standard oil system) (Option: max. operating inclinations)	L	197	liter

Technical Sales Document

- Product Data -

A Rolls-Royce solution

Name	12V4000G74F	**Speed [rpm]**	1500
Application Group	3D	**Nominal power [kW]**	1575
Dataset	Ref. 25°C/55°C	**Nominal power [bhp]**	2112
		Nominal power [kVA]	-
		Nominal power [kWel]	-
		Frequency [Hz]	50
Exhaust Regulations	Fuel-consumption optimized;		

19. Masses / dimensions

No.	Description	Index	Value	Unit
9	Engine mass, dry (basic engine configuration acc. to scope of supply specification)	R	6200 *	kg

Technical Sales Document

- Product Data -

A Rolls-Royce solution

Name	12V4000G74F	**Speed [rpm]**	1500
Application Group	3D	**Nominal power [kW]**	1575
Dataset	Ref. 25°C/55°C	**Nominal power [bhp]**	2112
		Nominal power [kVA]	-
		Nominal power [kWel]	-
		Frequency [Hz]	50
Exhaust Regulations	Fuel-consumption optimized;		

21. Exhaust emissions

No.	Description	Index	Value	Unit
1972	Emissions data sheet: Fuel-consumption optimized		EDS see Emission-DB	-

Technical Sales Document

- Product Data -

A Rolls-Royce solution

Name	12V4000G74F	**Speed [rpm]**	1500
Application Group	3D	**Nominal power [kW]**	1575
Dataset	Ref. 25°C/55°C	**Nominal power [bhp]**	2112
		Nominal power [kVA]	-
		Nominal power [kWel]	-
		Frequency [Hz]	50
Exhaust Regulations	Fuel-consumption optimized;		

22. Acoustics

No.	Description	Index	Value	Unit
101	Exhaust noise, unsilenced - CP (free-field sound-pressure level Lp, 1m distance, ISO 6798, +3dB(A) tolerance)	R	-	dB(A)
201	Exhaust noise, unsilenced - CP (sound power level LW, ISO 6798, +3dB(A) tolerance)	R	-	dB(A)
102	Exhaust noise, unsilenced - FSP (free-field sound-pressure level Lp, 1m distance, ISO 6798, +3dB(A) tolerance)	R	113	dB(A)
202	Exhaust noise, unsilenced - FSP (sound power level LW, ISO 6798, +3dB(A) tolerance)	R	125	dB(A)
103	Exhaust noise, unsilenced - CP (free-field sound-pressure level Lp, 1m distance, ISO 6798) Spectrum No.	R	-	-
203	Exhaust noise,unsilenced - CP (sound power level LW, ISO 6798) Spectrum No.	R	-	-
104	Exhaust noise, unsilenced - FSP (free-field sound-pressure level Lp, 1m distance, ISO 6798) Spectrum No.	R	733657e	-
204	Exhaust noise,unsilenced - FSP (sound power level LW, ISO 6798) Spectrum No.	R	N	-
109	Engine surface noise with attenuated intake noise (filter) - CP (free-field sound-pressure level Lp, 1m distance, ISO 6798, +2dB(A) tolerance)	R	-	dB(A)
209	Engine surface noise with attenuated intake noise (filter) - CP (sound power level LW, ISO 6798, +2dB(A) tolerance)	R	-	dB(A)

BL Reference value: fuel stop power
Maximum engine power that cannot be run continuously on some applications (stabilization reserve)
DL Reference value: continuous power
Engine power that can be run continuously under standard conditions

> Actual value must be greater than specified value
< Actual value must be less than specified value

X Applicable
The module is valid for this product type
- Non-applicable
The module is not valid for this product type
N Value not named
The value has not yet been named or will not be named

*** Adequate verification not yet available (tolerance +/- 10%)**
**** Adequate verification not yet available (tolerance +/- 5%)**

A Design value
Value required for the design of an external system (plant)
R Guideline value
Typical average value as information – only suitable for design purposes to a limited extent
L Limit value
A value representing the lower limit/minimum value or upper limit/maximum value that may not be exceeded. Not suitable for design purposes

Technical Sales Document

- Product Data -

A Rolls-Royce solution

Name	12V4000G74F	**Speed [rpm]**	1500
Application Group	3D	**Nominal power [kW]**	1575
Dataset	Ref. 25°C/55°C	**Nominal power [bhp]**	2112
		Nominal power [kVA]	-
		Nominal power [kWel]	-
		Frequency [Hz]	50

Exhaust Regulations Fuel-consumption optimized;

110	Engine surface noise with attenuated intake noise (filter) - FSP (free-field sound-pressure level Lp, 1m distance, ISO 6798, +2dB(A) tolerance)	R	103	dB(A)
210	Engine surface noise with attenuated intake noise (filter) - FSP (sound power level LW, ISO 6798, +2dB(A) tolerance)	R	121	dB(A)
111	Engine surface noise with attenuated intake noise (filter) - CP (free-field sound-pressure level Lp, 1m distance, ISO 6798) Spectrum No.	R	-	-
211	Engine surface noise with attenuated intake noise (filter) - CP (sound power level LW, ISO 6798) Spectrum No.	R	-	-
112	Engine surface noise with attenuated intake noise (filter) - FSP (free-field sound-pressure level Lp, 1m distance, ISO 6798) Spectrum No.	R	733671e	-
212	Engine surface noise with attenuated intake noise (filter) - FSP (sound power level LW, ISO 6798) Spectrum No.	R	N	-
131	Engine surface noise, without intake noise - CP (free-field sound-pressure level Lp, 1m distance, ISO 6798, +2dB(A) tolerance)	R	-	dB(A)
231	Engine surface noise, without intake noise - CP (sound power level LW, ISO 6798, +2dB(A) tolerance)	R	-	dB(A)
133	Engine surface noise, without intake noise - CP (free-field sound-pressure level Lp, 1m distance, ISO 6798) Spectrum No.	R	-	-
233	Engine surface noise, without intake noise - CP (sound power level LW, ISO 6798) Spectrum No.	R	-	-
117	Intake noise, unsilenced - CP (free-field sound-pressure level Lp, 1m distance, ISO 6798)	R	-	dB(A)

BL Reference value: fuel stop power
Maximum engine power that cannot be run continuously on some applications (stabilization reserve)
DL Reference value: continuous power
Engine power that can be run continuously under standard conditions

> Actual value must be greater than specified value
< Actual value must be less than specified value

X Applicable
The module is valid for this product type
- Non-applicable
The module is not valid for this product type
N Value not named
The value has not yet been named or will not be named

*** Adequate verification not yet available (tolerance +/- 10%)**
**** Adequate verification not yet available (tolerance +/- 5%)**

A Design value
Value required for the design of an external system (plant)
R Guideline value
Typical average value as information – only suitable for design purposes to a limited extent
L Limit value
A value representing the lower limit/minimum value or upper limit/maximum value that may not be exceeded. Not suitable for design purposes

Technical Sales Document

- Product Data -

A Rolls-Royce solution

Name	12V4000G74F	**Speed [rpm]**	1500
Application Group	3D	**Nominal power [kW]**	1575
Dataset	Ref. 25°C/55°C	**Nominal power [bhp]**	2112
		Nominal power [kVA]	-
		Nominal power [kWel]	-
		Frequency [Hz]	50

Exhaust Regulations Fuel-consumption optimized;

217	Intake noise, unsilenced - CP (sound power level LW, ISO 6798)	R	-	dB(A)
119	Intake noise, unsilenced - FSP (free-field sound-pressure level Lp, 1m distance, ISO 6798) Spectrum No.	R	-	-
219	Intake noise, unsilenced - CP (sound power level LW, ISO 6798) Spectrum No.		-	-
125	Structure borne noise at engine mounting brackets in vertical direction above resilient engine mounts - CP Spectrum No.	R	-	-
126	Structure borne noise at engine mounting brackets in vertical direction above resilient engine mounts - FSP Spectrum No.	R	733709e	-
127	Structure born noise, vertically below the resilient engine mounts - CP Spectrum No.	R	-	-

BL Reference value: fuel stop power
Maximum engine power that cannot be run continuously on some applications (stabilization reserve)
DL Reference value: continuous power
Engine power that can be run continuously under standard conditions

> Actual value must be greater than specified value
< Actual value must be less than specified value

X Applicable
The module is valid for this product type
- Non-applicable
The module is not valid for this product type
N Value not named
The value has not yet been named or will not be named

*** Adequate verification not yet available (tolerance +/- 10%)**
**** Adequate verification not yet available (tolerance +/- 5%)**

A Design value
Value required for the design of an external system (plant)
R Guideline value
Typical average value as information – only suitable for design purposes to a limited extent
L Limit value
A value representing the lower limit/minimum value or upper limit/maximum value that may not be exceeded. Not suitable for design purposes

Contents

	Genset	Marine	O & G	Rail	C & I
Application	X				
Engine model	12V4000G74F				
Fuel type	EN590				
Rated power [kW]	1575				
Rated speed [rpm]	1500				
Application Group	3D				
Legislative body	Fuel-consumption optimized				
Test cycle	D2				
Data Set No.	XZ54754101559				
Data Set Basis	Fuel-consumption optimized				
Fuel sulphur content [ppm]	5				

Content **Page**

Disclaimer 2

Emission data sheet (EDS) 3

Not to exceed emission values 7

PDF	Name	Project no.	Size
Configurator	Theiss, Sandro (TVMG)	Order no.	**A4**
Approver1	Kneifel, Alexander (TSL)	EDS-ID	
Approver2	Koliwer, Michael (TV)	**2917-24.08.2023**	
Approver3			
Approver4			
User	FN2\I382678		

All industrial property rights reserved. Disclosure, reproduction or use for any other purpose is prohibited unless our express permission has been given. Any infringement results in liability to pay damages.

Engine model
12V4000G74F

Title
Emission data sheet

Description of Revision	Frequency

Data generated by EDS Creator version 1.0 and uniplot.
Ref.-dataset: 412TA_001_bearbeitet.nc.nc2 for 1377 in EDS platfrom.

Emissionstage
Fuel-consumption optimized

Sheet
1
of
8

Configuration-ID
1377

Documentation

Emissionstage basis
Fuel-consumption optimized

General Disclaimers (valid for Measured and NTE values)

Please note that these data are physical and/or technical values only referring to and representing a normative defined operating condition. Any change in operating time and conditions will have impact on physical values and engine behavior, which must be considered and assessed within the complete propulsion system especially in regard to emission compliance and product safety.

Measurements listed in this EDS are representative of the listed engine rating at the time of testing. These measurements and results can change according to instrumentation, boundary condition, and engine to engine variability. In addition - changes to the engine family hard or software may occur which could result in changes to some of the listed values.

Emissions data measurement procedures are conducted according to applicable rules and standards as per “Emission Stage/Optimization”. Potential deviations from these procedures are documented internally.

The listed emission values relate to the corresponding certification data. Seller doesn´t take any responsibility or liability neither out or in connection with the contract nor on any other basis
- beyond these specified operating conditions of the engine
- and for any installation/modification of the entire propulsion system by the customer itself or any third party
and the customer will indemnify MTU on first demand for any third party claim out or in connection with this.

Seller reserves the right to amend specifications and information without notice and without obligation or liability. No liability for any errors, facts or opinions is accepted. Customers must satisfy themselves as to the suitability of this product for their application. No responsibility for any loss as a result of any person placing reliance on any material contained in this data sheet will be accepted.

Seller reserves all rights in the information contained in this data sheet. It shall not be reproduced, made available to a third party or otherwise used in any way whatsoever.

When applicable, emission values are measured after combined exhaust streams.

Measured Emissions data is based on single operating points and thus cannot be used to compare to regulations which use values based on a weighted cycle.

Field emission test data are not guaranteed to these levels. Actual field test results may vary due to test site conditions, installation, fuel specification, test procedures, and instrumentation. Over time deterioration may occur which may have an impact on emission levels.

The SO2 emission rates comprehend exclusively the SO2 content as found in the fuel source, oil consumption effects are not included. Variation of sulfur content in the fuel changes only the stated SO2 emissions, cross sensitivity to other emissions (e.g. particulates) is not possible.

All values based on metric units, inaccuracies for non metric values can occur, values are not binding.

Specific to gas engines: The listed emission values are based on gas composition at the time of certification measurement. Gas composition is as displayed in the EDS-document. Carbon dioxide and methane concentrations have direct influence on the corresponding displayed carbon dioxide and methane emissions.

EAT Specific Disclaimers (valid for EDS values)

NH3 emissions levels measured with AVL SESAM i60/ 4 FT Multi Component Exhaust Measurement System (FTIR) including EPA 40 CFR 1065 legislation compliant automated checks for linearity.
Generators or engines with exhaust after-treatment systems require a stabilization period of approximately 1 hour to ensure stable temperatures across SCR prior to performing an emissions test. Performing emissions measurements before a stable temperature has been achieved can result in inconsistent emission values. NOx Values only applicable if temperatures across SCR reached for DEF Dosing.

NTE Disclaimers (valid for NTE calculated values)

Calculated not to exceed values (NTE) are not proven by tests and therefore the accuracy is not guaranteed.

All emission data shown in chapters Emission Data Sheet, Not to Exceed Values, and Type Approval were gathered from a corresponding certification engine under test conditions shown above and complying to corresponding TEN data.

All industrial property rights reserved. Disclosure, reproduction or use for any other purpose is prohibited unless our express permission has been given. Any infringement results in liability to pay damages.

Engine data

	Genset	Marine	O & G	Rail	C & I
Application	X				
Engine model	12V4000G74F				
Fuel type	EN590				
Application Group	3D				
Legislative body	Fuel-consumption optimized				
Test cycle	D2				
Fuel sulphur content [ppm]	5				
mg/mN^3 values base on residual oxygen value of [%]	5				

Engine raw emissions*

Cycle point	[-]	n1	n2	n3	n4	n5
Power	kW	1575	1181	788	394	158
Power relative	[-]	1	0.75	0.5	0.25	0.1
Engine torque	Nm	10027	7520	5013	2507	1003
Engine torque relative	[-]	1	0.75	0.5	0.25	0.1
Engine speed	1/min	1500	1500	1500	1500	1500
Engine speed relative	[-]	1	1	1	1	1
Eff. mean pressure	bar	22.01	16.51	11.01	5.5	2.2
Number of turbocharger	[-]	4	4	4	4	4
Test bench pressure	bar	0.975	0.975	0.975	0.975	0.975
Air pressure at humidity measurement position	bar	0.975	0.975	0.975	0.975	0.975
Air temperature at humidity measurement position	grdC	31.2	32.6	28.1	26.2	24.6

All industrial property rights reserved. Disclosure, reproduction or use for any other purpose is prohibited unless our express permission has been given. Any infringement results in liability to pay damages.

Intake air humidity absolut	g/kg	6	6.2	5.9	6.2	6.5
Intake air temperature	grdC	30.1	29.4	25.5	23.8	23
Exhaust back pressure after ETC (static)	mbar	29.7	18.1	9.5	4.6	2.1
Exhaust temperature after ETC	grdC	500	486	453	361	243
Exhaust temperature at AMA measurement position	grdC	469	461	427	338	232
Nitrogen oxide (NO_x) (5% O_2)	ppm	1985	2031	1767	1297	1205
NO_X correctionfactor	[-]	0.958	0.964	0.962	0.965	0.966
NO_X concentration corr. (5% O_2)	ppm	1901	1957	1700	1251	1165
Carbon monoxide (CO) (5% O_2)	ppm	164	142	122	213	448
Carbon dioxide (CO_2)	%	8.7	8.4	7.5	5.5	3.3
Oxygen (O_2)	%	8.7	9.2	10.3	13.1	16.1
Hydrocarbon (HC) (5% O_2)	ppm	103	110	119	190	398
Formaldehyde (HCHO) (5% O_2)	ppm	10	10	6	7	16
Filter smoke number	Bosch	0.2	0.22	0.38	0.59	0.28
Exhaust mass flow wet	kg/h	7708	6038	4617	3447	2899

All industrial property rights reserved. Disclosure, reproduction or use for any other purpose is prohibited unless our express permission has been given. Any infringement results in liability to pay damages.

Exhaust volume flow (norm) (5% O_2)	m^3/s	1.65	1.3	0.99	0.74	0.62
Exhaust volume flow (real) (5% O_2)	m^3/s	4.53	3.55	2.61	1.71	1.19
Exhaust volume flow dry (based on $_5$% O_2)	m^3/s	1.17	0.89	0.62	0.35	0.18
NO_X mass flow	kg/h	17.87	13.85	8.29	3.36	1.62
CO mass flow	kg/h	0.87	0.57	0.34	0.33	0.37
CO_2 mass flow	kg/h	943	711	493	274	142
O_2 mass flow	kg/h	683	566	492	474	500
HC_1 mass flow	kg/h	0.29	0.24	0.18	0.15	0.17
PM mass flow	kg/h	0.068	0.054	0.047	0.054	0.045
NO_X-Emissions specific	g/kWh	11.34	11.72	10.53	8.54	10.31
CO-Emissions specific	g/kWh	0.55	0.48	0.43	0.84	2.34
CO_2-Emissions specific	g/kWh	598.4	601.9	625.6	696.4	899
HC_1-Emissions specific	g/kWh	0.19	0.2	0.22	0.39	1.06
PM-Emissions specific (Meas.)	g/kWh	0.046	0.049	0.064	0.145	0.303
NO_X-Emissions (based on $_5$% O_2)	mg/m^3N	4410	4500	3886	2804	2557
	ppmV	2385	2429	2070	1485	1350
CO-Emissions (based on $_5$% O_2)	mg/m^3N	205	177	152	266	560

PDF	Name	Project no.	Size
Configurator	Theiss, Sandro (TVMG)	Order no.	A4
Approver1	Kneifel, Alexander (TSL)	EDS-ID	
Approver2	Koliwer, Michael (TV)	2917-24.08.2023	
Approver3			
Approver4			
User	FN2\I382678		

All industrial property rights reserved. Disclosure, reproduction or use for any other purpose is prohibited unless our express permission has been given. Any infringement results in liability to pay damages.

Engine model
12V4000G74F

Title
Emission data sheet

Description of Revision	Frequency

Data generated by EDS Creator version 1.0 and uniplot.
Ref.-dataset: 412TA_001_bearbeitet.nc.nc2 for 1377 in EDS platfrom.

Emissionstage
Fuel-consumption optimized

Emissionstage basis
Fuel-consumption optimized

Configuration-ID
1377

Documentation

CO_2-Emissions (based on $_5$% O_2)	mg/m^{3}N	222861	222705	222143	220552	215572
HC_1-Emissions (based on $_5$% O_2)	mg/m^{3}N	69	74	79	124	255
PM-Emissions (based on $_5$% O_2)	mg/m^{3}N	17.1	18	22.6	46	72.6
Dust (meas. O_2)	mg/m^{3}N	2.3	3.4	4.5	19.4	8.2
Dry-wet correction factor	[-]	0.924	0.926	0.933	0.949	0.968

All industrial property rights reserved. Disclosure, reproduction or use for any other purpose is prohibited unless our express permission has been given. Any infringement results in liability to pay damages.

Engine data

	Genset	Marine	O & G	Rail	C & I
Application	X				
Engine model	12V4000G74F				
Fuel type	EN590				
Application Group	3D				
Legislative body	Fuel-consumption optimized				
Test cycle	D2				
Fuel sulphur content [ppm]	5				
mg/mN^3 values base on residual oxygen value of [%]	5				

Not to exceed emission values*

Cycle point	[-]	n1	n2	n3	n4	n5
Power	kW	1575	1181	788	394	158
Power relative	[-]	1	0.75	0.5	0.25	0.1
Engine speed	1/min	1500	1500	1500	1500	1500
Engine speed relative	[-]	1	1	1	1	1
NO_X concentration corr. (5% O_2)	ppm	2471	2544	2210	1877	2213
Carbon monoxide (CO) (5% O_2)	ppm	279	241	231	425	896
Hydrocarbon (HC) (5% O_2)	ppm	176	187	227	381	1155
Formaldehyde (HCHO) (5% O_2)	ppm	16	17	12	13	47
NO_X mass flow	kg/h	23.23	18	10.78	5.05	3.09
CO mass flow	kg/h	1.48	0.96	0.64	0.66	0.74
HC_1 mass flow	kg/h	0.5	0.4	0.33	0.31	0.49
NO_X+HC_1 mass flow	kg/h	23.73	18.4	11.11	5.35	3.57

All industrial property rights reserved. Disclosure, reproduction or use for any other purpose is prohibited unless our express permission has been given. Any infringement results in liability to pay damages.

PM mass flow	kg/h	0.102	0.086	0.07	0.081	0.167
NO_X-Emissions specific	g/kWh	14.75	15.24	13.69	12.81	19.58
CO-Emissions specific	g/kWh	0.94	0.81	0.81	1.68	4.67
HC_1-Emissions specific	g/kWh	0.32	0.34	0.42	0.78	3.09
NO_X+HC_1-Emissions specific	g/kWh	15.06	15.58	14.11	13.6	22.67
PM-Emissions specific (Meas.)	g/kWh	0.069	0.078	0.096	0.218	1.121
NO_X-Emissions (based on $_5$% O_2)	mg/m^{3}N	5733	5850	5052	4206	4858
	ppmV	3101	3157	2691	2227	2566
CO-Emissions (based on $_5$% O_2)	mg/m^{3}N	349	301	289	532	1120
HC_1-Emissions (based on $_5$% O_2)	mg/m^{3}N	118	125	150	248	739
NO_X+HC_1-Emissions (based on $_5$% O_2)	mg/m^{3}N	5851	5975	5202	4454	5597
PM-Emissions (based on $_5$% O_2)	mg/m^{3}N	25.7	28.7	33.9	69	268.7
Dust (meas. O_2)	mg/m^{3}N	3.5	5.4	6.8	29.1	30.3

PDF	Name	Project no.	Size
Configurator	Theiss, Sandro (TVMG)	Order no.	**A4**
Approver1	Kneifel, Alexander (TSL)	EDS-ID	
Approver2	Koliwer, Michael (TV)	**2917-24.08.2023**	
Approver3			
Approver4			
User	FN2\I382678		

All industrial property rights reserved. Disclosure, reproduction or use for any other purpose is prohibited unless our express permission has been given. Any infringement results in liability to pay damages.

Engine model
12V4000G74F

Title
Emission data sheet

Description of Revision	Frequency

Data generated by EDS Creator version 1.0 and uniplot.
Ref.-dataset: 412TA_001_bearbeitet.nc.nc2 for 1377 in EDS platfrom.

Emissionstage
Fuel-consumption optimized

Sheet **8** of **8**

Configuration-ID
1377

Documentation

Emissionstage basis
Fuel-consumption optimized

To the kind attention of:

AQ COMPUTE
Data Center AQ-MXP1
Sedriano, MI
Italy

OBJECT: Technical Proposal for the Supply of
N. 1 x 1600 kVA Standby Diesel Generator

Offer n.: 250137_rev03
Date: 22/05/2025

1600 kVA – 400Vac – Standby Rating

n°1 **GENERATING SET** our **MT1600SWD** type with the following technical features:

- Standby power : **1600 kVA / 1280 kWe**
- Power factor : 0.8 LAGGING
- Voltage rating : 400V Three Phase (TN-S)
- Frequency : 50 Hz
- Rotating speed : 1500 rpm

Each genset is composed of:

- diesel engine **MTU 12 V4000 G74F** type, aftercooled/turbo-charged, 12 V-line cylinders, water-cooled, electronic speed governor, electric starting 24Vdc, **fuel consumption optimized (FCO)**

- alternator **LEROY SOMER LSA 52.3 S7** type, rated power 1600 kVA, insulation class H, temperature rise H, with sub-transient reactance X"d<12% (saturated), self-excited and self-regulated, brushless, Idc>3 In, mechanical protection IP23, IC01 cooling, single bearing, CTs for parallel use, PMG excitation system, anti-condensation heater 230Vac 500W, 1 RTD for bearing and 2 RTD per phase on winding, AVR D550 in a dedicated enclosure

Configuration on skid-base made by steel beams pressure-twisted and electro-welded, with antivibration mountings, arranged for automatic operation. The genset is equipped with:

- **Lube oil pressure protection**;
- **Cooling Water temperature protection**;
- **Cooling Water level protection**;

The supply also includes:

- **Redundant electric starting system** including:
  - N. 2 engine starter motors, each capable of starting the internal combustion engine on its own;
  - N. 2 set of sealed type 24V batteries, model Optima YellowTop S 5.5, with dedicated shelf, cut-off switch and aux contacts;
  - Second battery charger;
- **Mechanical Radiator**, mounted on skid and in-line with genset, with blowing fan driven by engine complete of connection pipelines, thermostatic valve and circulation pump;
- **Containment tank incorporated in the base** to collect any oil/water/diesel leaks, complete with liquid detection alarm sensor;
- **Water preheating system**, 6 kW with thermostatic valve;
- **Double cartridge diesel pre-filter system** with by-pass valve and water presence sensor;
- **Engine oil filtering system** according to manufacturer standards and lube oil manual pump
- Engine return **fuel cooler** to the day service tank, as described herein;
- Painting cycle and color as per our standards
- Lifting points;
- Anchor bolts;
- **Exhaust gas collector**
- **Exhaust gas expansion joint** for engine exhaust gas outlet connection;
- **Residential type silencer,** installed on the roof of the container as described hereinafter;

- **AUTOMATIC CONTROL PANEL**, mounted inside the genset's container described below, in a special compartment with dedicated access door, with microprocessor management logic **InteliGen 500 G2** by **ComAp**, programmable by the user via a user-friendly interface and access with customer password, for controlling and monitoring all the parameters of the genset, complete of:

1. **Gauges on display:**
   - Mains voltmeter (R S T line voltages and phase voltage)
   - Mains frequency meter
   - DG voltmeter (U V W line voltage and phase voltage)
   - Ammeter on three phases (U V W)
   - DG frequency meter
   - Hours counter
   - Start counter
   - Power factor meter
   - Wattmeter
   - DG kVAR
   - DG apparent power
   - DG kWh
   - Battery voltmeter

2. **Led / display indication:**
   - Changeover state indication
   - Active alarm(s)
   - Engine running
   - DG Voltage/frequency within nominal value

- Mains Voltage/frequency within nominal value
- Electric feeding ON and controller OK
- Operation modes

3. **Protections:**
   - DG low/high voltage (27/59)
   - DG low/high frequency (81<>)
   - Battery voltage out of limits (80/45)
   - High engine temperature
   - Low oil pressure
   - Overspeed
   - DG overload (kW)
   - Alternator overcurrent (51)
   - Short-circuit (50)
   - Starting failure
   - Stop failure
   - Emergency stop
   - Phase sequence error (47)
   - Alternator under/over excitation (40)
   - Alarm for end of fuel
   - Warning/shutdown for low water level
   - Alarm/stop for low fuel level

4. **Other features and visualization on display:**
   - Engine preheating timer
   - Mains fail/return timer
   - Engine cooling cycle timer
   - Changeover exchange timer
   - Mains voltage and frequency thresholds
   - Displayed information available in multiple languages
   - Load transient delay timer
   - Historical report of last 150 events
   - Fuel level indicator
   - Oil pressure gauge
   - Water temperature gauge
   - Gauge for windings/bearing(s) temperature with alarm visualization
   - Remote management via RS485 ModBus RTU

5. **Other devices**
   - Redundant battery charger
   - Engine preheating
   - Free contact for cumulative failure
   - Free contact for controller failure
   - Fuel detection sensor in drip leaks tray
   - Earth leakage protection 64/S
   - Automatic switch for auxiliary circuits
   - Free contacts for remote alarms

- **POWER PANEL,** mounted inside the genset's container described below, in special cabinets with dedicated access door, complete of:

  - **Automatic Circuit Breaker, 2500A, 4P**, for Generator protection, withdrawable version with motor control and electronic protection.
  - **Automatic Circuit Breaker, 2500A, 4P**, for protection of the CAM Panel as described hereinafter, in fixed version with motor control and electronic protection.

  Mains/Genset Automatic Transfer Switch – excluded from our supply.

- **CAM PANEL 2500A**, with power lock connection for an external mobile load bank (the latter not included in our scope), accessible from the external side of container;

- **GENERATOR SET CONTAINER**, and related accessories, made of sheet steel, **noise level 85±3 dB(A) at a distance of 1m** in free field and in the absence of background noise.
  The genset container has the following preliminary overall dimensions (LxWxH): mm 14000x3000x3500

  The longitudinal walls are equipped with access doors and panels to allow normal maintenance operations
  Externally it's equipped with:

  - Auxiliaries Circuit Breaker
  - Diesel cut off valve in safe crush housing;
  - Emergency stop push-button, in safe crush housing;
  - Safety signs

  Electric inflation fans and heaters will be also provided and installed within the genset's container, if required, activable by thermostat.

  Container external painting according to our **C3H cycle** in RAL colour to be defined.

- **AIR INLET & OUTLET,** equipped with fixed type anti-rain louvers (horizontal air flow entry). Designed as showed in the preliminary drawings.

- **SOUND ATTENUATOR SPLITTERS,** installed for broadband attenuation at the air inlet and air outlet;

- **LIGHTING SYSTEM,** installed within the DG container as per current regulations, composed of N. 6 x LED ceiling lights, 58W each, 230Vac, with ON/OFF switches and power sockets;

- **DAILY FUEL TANK SYSTEM,** installed within the container and described above. It includes:

  - **Daily fuel tank, 1000L capacity**, double wall type, equipped with leak detection sensor;
  - Fuel piping circuit from / to daily fuel tank to engine;
  - Alarm sensor for Min/Max level and for starting/stopping the electric diesel refuelling pump;
  - Shut-off valve equipped with dry contacts

- **DIESEL PUMPING UNIT** for automatic filling of the Genset's service tank, complete with retaining vat and liquid detection sensor. The diesel pumping unit consists of a double diesel electric pump with automatic exchange via

PLC, backup hand pump with by-pass circuit. The command-and-control circuit is integrated into the generator set panel. The diesel pumping unit will be installed inside the generator's container.

- **SCR equipment (NOx <100 mg/Nm3, CO <100 mg/Nm3, PM <10 mg/Nm3)**, consisting of:

  - Injection section with integrates measuring nozzles
  - Dosing station
  - Control box with measurement devices, communication bus, remote control
  - Urea tank, integrated inside the container, duly sized for approx. 24 hours autonomy

- **DOCUMENTATION** and preliminary and as-built technical documents;

- **CERTIFICATIONS** in compliance with the legal provisions in force for the materials we supply;

The aforesaid **gensets**, beyond to be built in accordance with the quality control directives "**ISO 9001**", are in conformity and certified in accordance with the following directives:

☒ **COMMUNITY DIRECTIVES**

MACHINES DIRECTIVES – 2006/42/CE
LOW VOLTAGE DIRECTIVE – 2006/95/CE
ELECTROMAGNETIC COMPATIBILITY DIRECTIVE – 2004/108/CE

☒ **HARMONIZED DIRECTIVES**

UNI EN ISO 12100-1, UNI EN ISO 12100-2, UNI EN ISO 13857, UNI EN ISO 13850
EN 60439-1, UNI EN 12601, EN 60204-1, EN 60529, EN 60073, EN 61000-6-X.

☒ **TECHNICAL DIRECTIVES**

ISO 8528, ISO 3046, BS 4999, BS 5000, IEC 34-1, CEI 3-14, CEI 3-15, CEI 3-16, CEI 3-18, CEI 3-19, CEI 3-20, CEI 3-25, CEI 16-4.

☒ **Ministerial Decree dated July 13, 2011**

Each equipment takes the label "**CE**".

What has been aforesaid will be attested by a regular « Declaration of compliance ».